ERMCO COMPONENTS, INC.

UNLESS OTHERWISE SPECIFIED, TOLERANCES ARE

SURFACES	2 PL DEC	3 PL DEC	ANGLES
✓	±	±	± DEG

TITLE OUTLINE: BREAKER ASM

32B128001

CONT ON SH SH

FIRST MADE FOR T1 & T12 Bkrs (Prolec)

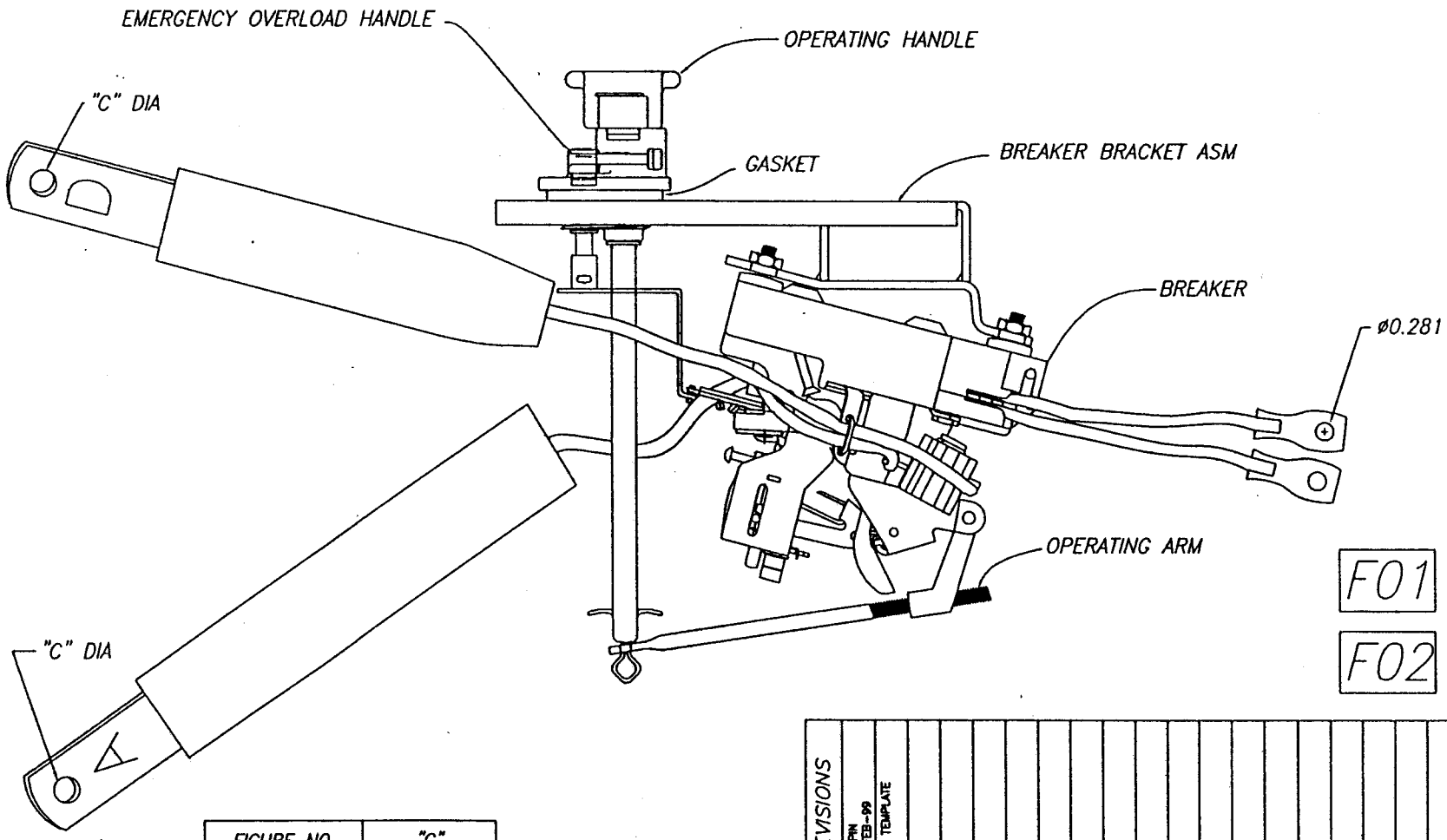

FIGURE NO.	"C"
·01	0.406
02	0.531

REVISIONS

1	STULPIN 04-FEB-99	UPDATED TEMPLATE

ERMCO-BTL

PRINTS

MADE BY: S. STULPIN 16-June-97 LCN #1196

ISSUED BY: S. STULPIN 04-FEB-99

APPROVALS

HICKORY ERMCO

32B128001

CONT ON SH SH

A1-1R

02/99