ERMCO COMPONENTS, INC.

TITLE

OUTLINE (OPERATING ARM)

3 2A128001 CONT ON SH SH 1

FIRST MADE FOR OPERATING ARM (T1& T12 BKRS)

UNLESS OTHERWISE SPECIFIED, TOLERANCES ARE			
SURFACES	2 PL DEC	3 PL DEC	ANGLES
✓	± 0.01	± 0.005	± 5 DEG

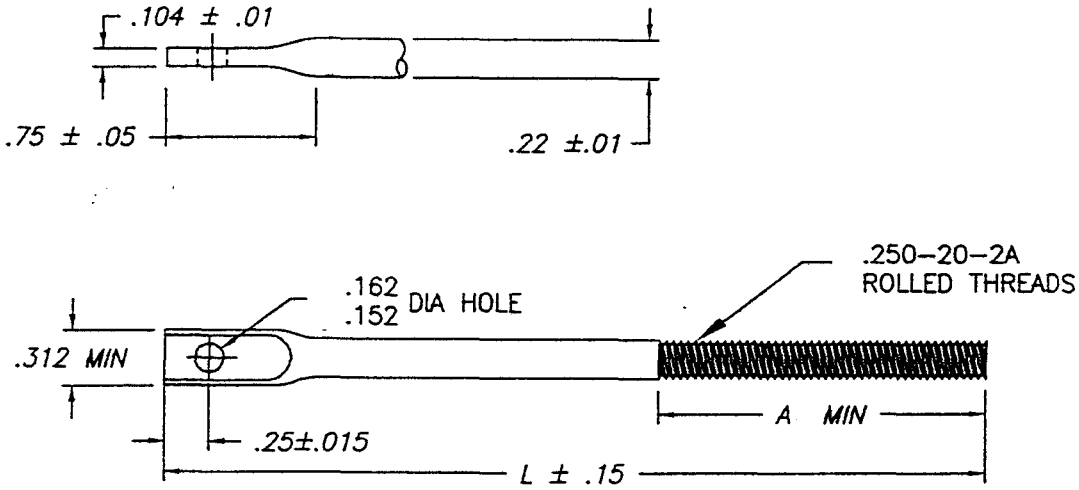

OPERATING ARM

F01

Catalog Number	"L" (inches)	"A" (inches)
7572ZH1299	12.00	6.00
7572ZH4299	5.50	2.50
7572ZH4399	6.50	2.50
7572ZH4499	9.00	2.50
7572ZH4699	10.50	2.50
7572ZH4799	7.50	2.50
7572ZH4899	12.00	2.50
7572ZH5099	13.50	2.50
7572ZH5299	15.00	2.50
7572ZH5499	16.50	2.50
7572ZH5699	18.00	2.50
7572ZH5899	19.50	2.50
7572ZH8399	19.50	13.00
7572ZH6099	4.74	2.50

REVISIONS

3	S. STULPIN 29-MAR-99	UPDATED TEMPLATE ADDED ZH0000 ECN F489
2	K. Carroll 22-June-98	CHG DIM fr .219+-.002 to .22+-.01 ADD TOL TO .26 & L CHG TOL TO A-WAS +.12-.00 CHG DWG-WAS 32A092000, ADD ROUT. ECN F172 Correction Added Cat #'s Deleted Inadvertently
1	S. STULPIN 08-MAY-97	

ERMCO-BTL

PRINTS TO

MADE BY: B.BRITTAIN 5/24/95	APPROVALS 3/30/99	HICKORY ERMCO	3 2A128001
ISSUED BY: S. STULPIN 29-MAR-99			CONT ON SH SH 1